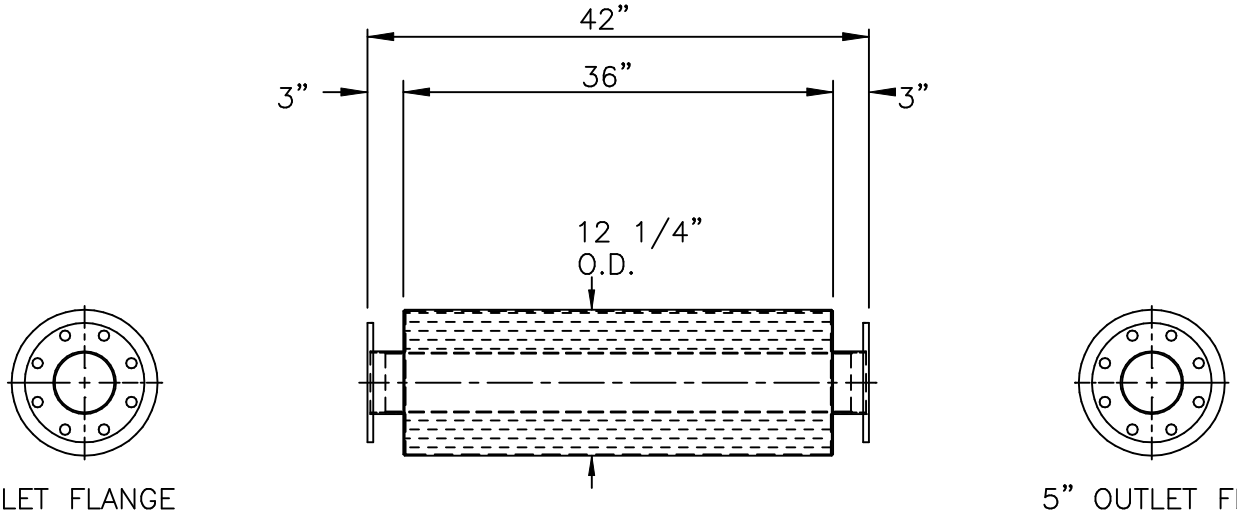

5” INLET FLANGE
1/2” PLATE, 10” O.D.
WITH (8) 7/8” ø HOLES
ON 8 1/2” B.C.
STRADDLE C.L.

5” OUTLET FLANGE
1/2” PLATE, 10” O.D.
WITH (8) 7/8” ø HOLES
ON 8 1/2” B.C.
STRADDLE C.L.

SERVICE: INLINE ABSORPTIVE SILENCER

SILENCER PRESSURE DROP AT MAX FLOW RATE: (0.3)*(Velocity Head In 5” Duct)

OVERALL DBA SILENCER INSERTION LOSS: UP TO 30 dBA DEPENDING UPON NOISE SOURCE

MATERIALS OF CONSTRUCTION:
- SHELL: 12 GA CARBON STEEL
- HEADS: 3/16”CARBON STEEL
- INTERNALS: 14 GA CARBON STEEL PERFO
- PACKING: FIBERGLASS

EXTERNAL PAINT: HIGH TEMP BLACK

WEIGHT: 98 LBS

CERTIFICATION

CUSTOMER:_____

CUSTOMER P.O. NO.:_____

DATE:_____ BY:_____

				MAXIM SILENCERS			10635 BRIGHTON LANE STAFFORD, TX.. 77477 PHONE (832) 554-0980 FAX (832) 554-0990		
				MODEL 5” FPE INLINE ABSORPTIVE SILENCER					
				DRAWN	TJW	10/3/06	ORDER NO.	DRAWING NO.	REV
				CHECKED				STD_5FPE	
NO.	REVISIONS	APPR.		APPROVED	TJW	10/3/06	SHEET		