12" INLET AND OUTLET FLANGES
1/2" PLATE, 19" O.D.
(12) 1" DIA. HOLES
ON 17" B.C. STRADDLE C.L.

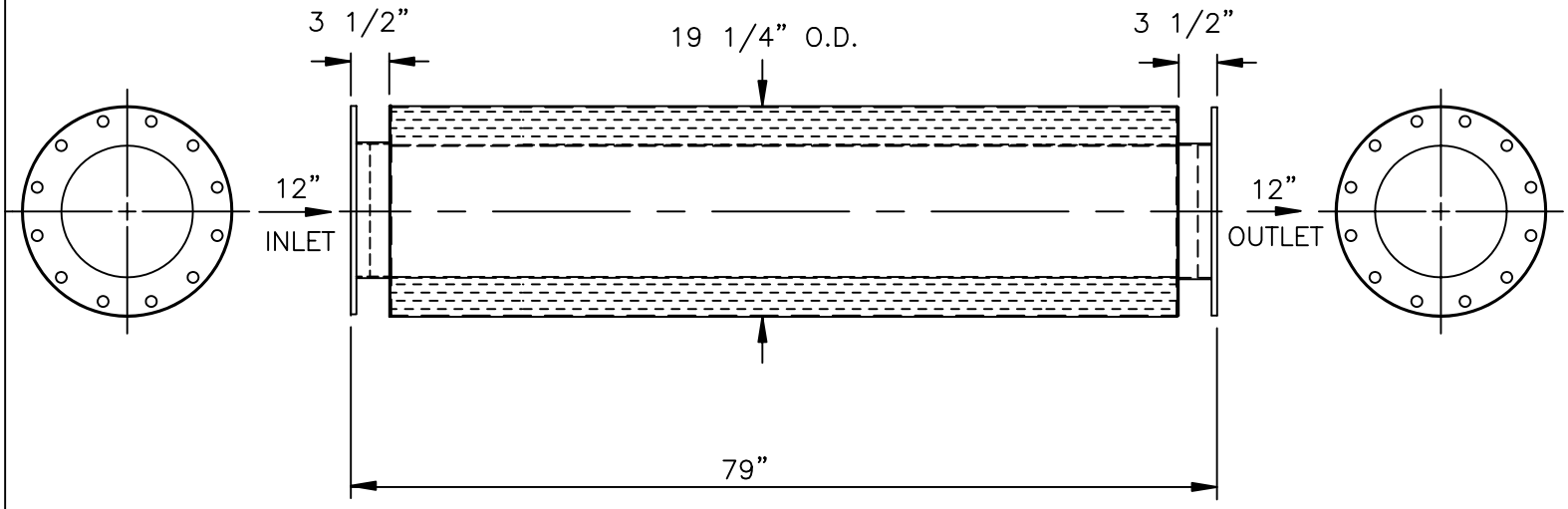

SERVICE: SUPPLEMENTAL EXHAUST SILENCER FOR RECIPROCATING ENGINE

OCTAVE BAND	63	125	250	500	1K	2K	4K	8K
INSERTION LOSS	5	12	16	20	25	25	20	18

SILENCER PRESSURE DROP:
(0.3)*(VELOCITY HEAD IN 12" DUCT)

MATERIALS OF CONSTRUCTION:
SHELL: 12 GA CARBON STEEL
PERFO: 14 GA CARBON STEEL
PACKING: FIBERGLASS MAT

EXTERNAL PAINT: HIGH TEMPERATURE BLACK

WEIGHT: 290 LBS.

CERTIFICATION

CUSTOMER: _____

CUSTOMER P.O. NO.: _____

_____

DATE: _____ BY: _____

No.	REVISIONS	APPR.

MAXIM SILENCERS

10635 BRIGHTON LANE
STAFFORD, TX. 77477
PHONE (832) 554-0980
FAX (832) 554-0990

12" FPE EXHAUST SILENCER

DRAWN	TJW	9/24/03	ORDER NO.	DRAWING NO.	REV
CHECKED				STD_12FPE	
APPROVED				Sheet 1 of 1	