8" INLET AND OUTLET FLANGES
1/2" 304 SS PLATE, 13 1/2" O.D.
(8) 7/8" DIA. HOLES
ON 11 3/4" B.C.
STRADDLE C.L.

NOTE: FLOW MAY BE IN EITHER DIRECTION WITH PRESSURE DROP AND NOISE ATTENUATION BEING THE SAME.

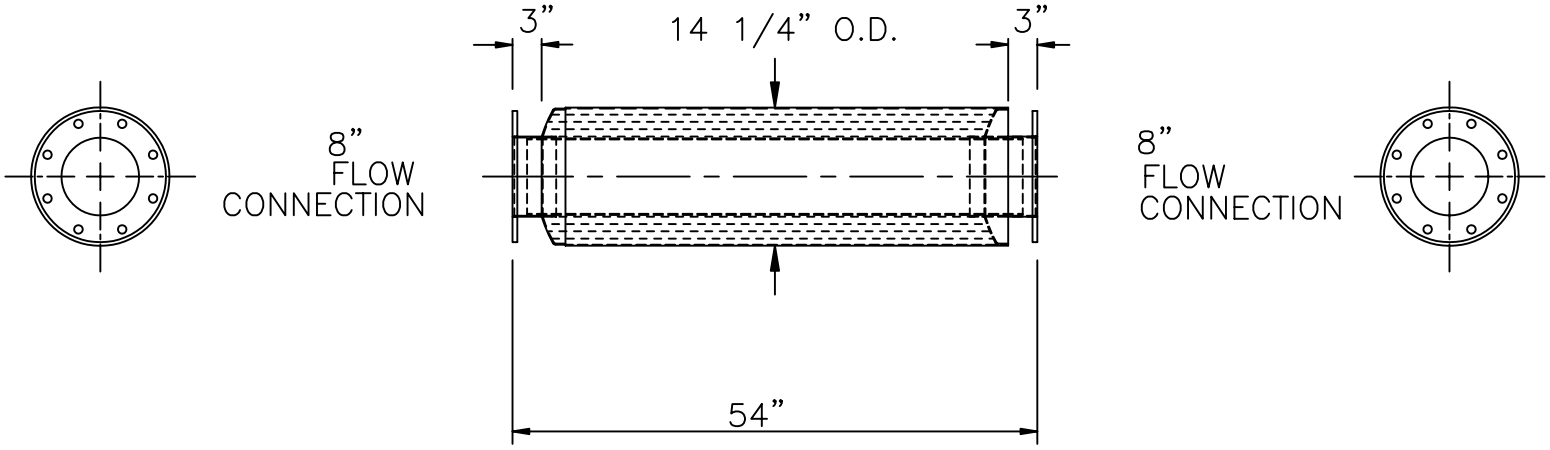

SERVICE: INLINE SILENCER FOR BLOWER OR COMPRESSOR
(OPERATING PRESSURE < 15 PSIG)

OCTAVE BAND	31	63	125	250	500	1K	2K	4K	8K
INSERTION LOSS	0	2	5	17	30	32	30	27	24

SILENCER PRESSURE DROP: (0.3)*(Velocity Head In 8" I.D.Duct)

MATERIALS OF CONSTRUCTION: CARBON STEEL
SHELL: 12 GAGE CS
HEADS : 12 GA CS
PERFO: 12 GA CS
PACKING: POLYESTER WOOL

EXTERNAL PAINT: HIGH TEMPERATURE BLACK

WEIGHT: 200 LBS.

CERTIFICATION

CUSTOMER: _____

CUSTOMER P.O. NO.: _____

DATE: _____ BY: _____

No.	REVISIONS	APPR.

MAXIM SILENCERS

10635 BRIGHTON LANE
STAFFORD, TX 77477
PHONE (832) 554-0980
FAX (832) 554-0990

8"MB11 INLINE BLOWER SILENCER

DRAWN	TJW	9/27/01	ORDER NO.	DRAWING NO.	REV
CHECKED				8MB11_STD	
APPROVED				Sheet 1 of 1	