5" INLET FLANGE
1/2"PLATE, 10"O.D.
(8) 7/8" DIA HOLES
ON 8 1/2"B.C.,
STRADDLE VERTICAL C.L.

5" OUTLET FLANGE
1/2"PLATE, 10"O.D.
(8) 7/8" DIA HOLES
ON 8 1/2"B.C.,
STRADDLE VERTICAL C.L.

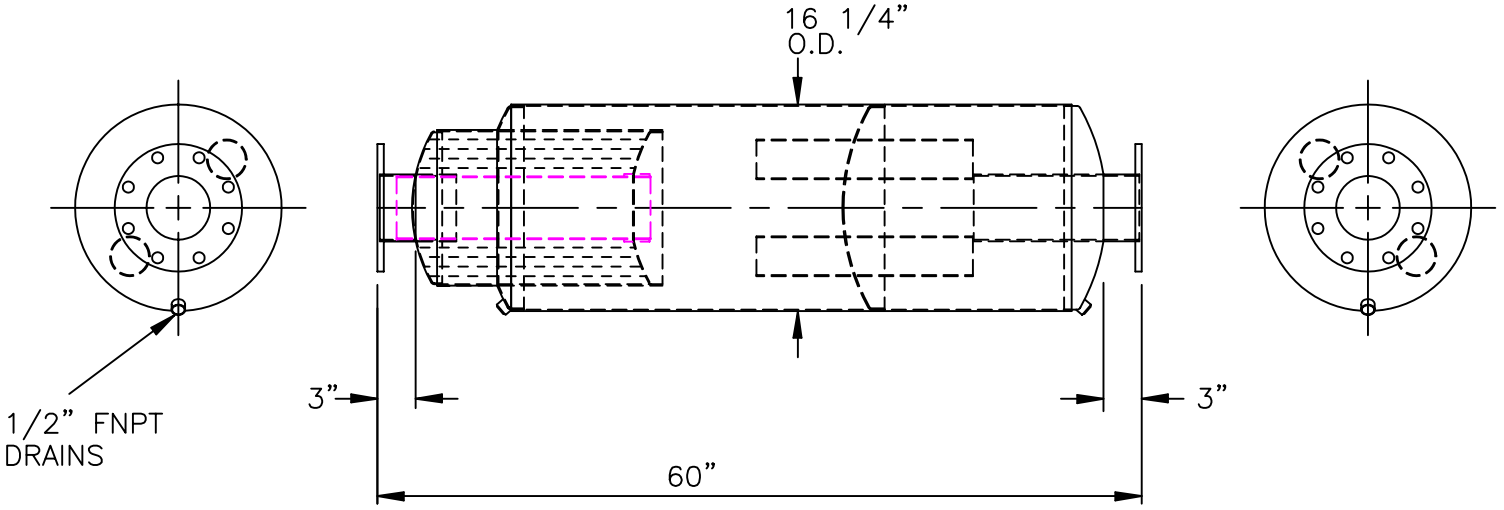

NOTES :

1. SERVICE: SILENCER FOR ROTARY POSITIVE BLOWER
2. PRESSURE DROP: (5.0)*(Velocity Head In 5" Duct)
3. NOISE ATTENUATION

OCTAVE BAND	63	125	250	500	1k	2k	4k	8k
ATTENUATION, dB	8	20	30	30	30	30	30	30

4. MATERIALS OF CONSTRUCTION:
   SHELL: 12 GAGE CARBON STEEL
   HEADS AND BAFFLE: 14 OR 12 GA. CARBON STEEL
   ACOUSTICAL PACKING: POLYESTER WOOL PROTECTED WITH 14 GA CARBON STEEL PERFO AND FINE MESH ALUMINUM SCREEN WIRE
5. EXTERNAL PAINT: BLACK PRIMER
6. WEIGHT: 195 LBS

CERTIFICATION

CUSTOMER: _____

CUSTOMER P.O. NO.: _____

DATE: _____ BY: _____

MAXIM SILENCERS

10635 BRIGHTON LANE
STAFFORD, TX 77477
PHONE (832) 554-0980
FAX (832) 554-0990

5"MB31 BLOWER SILENCER

No.	REVISIONS	APPR.

DRAWN	TJW	8/21/02	ORDER NO.	DRAWING NO.	REV
CHECKED				5_MB31_STD	
APPROVED					