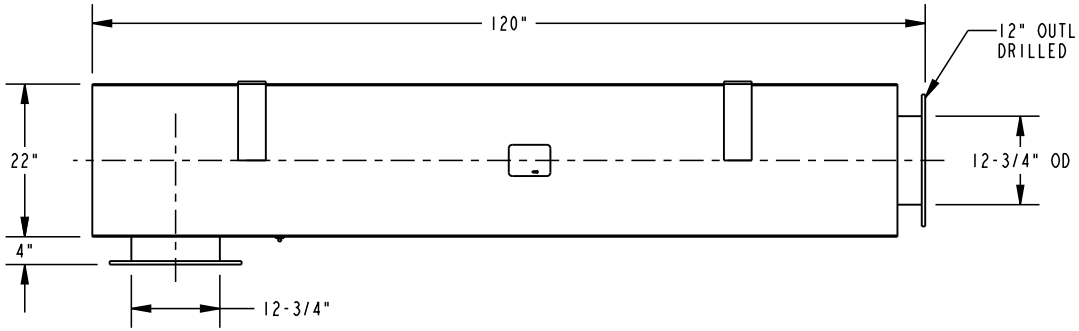

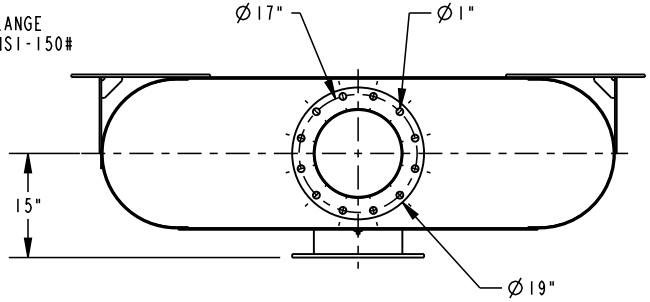

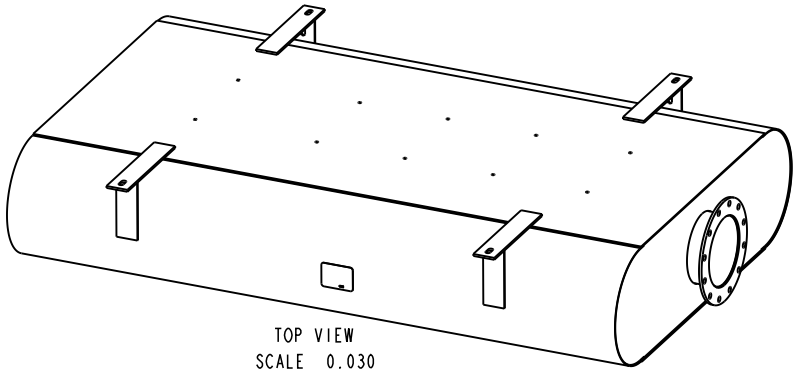

TOP VIEW
SCALE 0.030

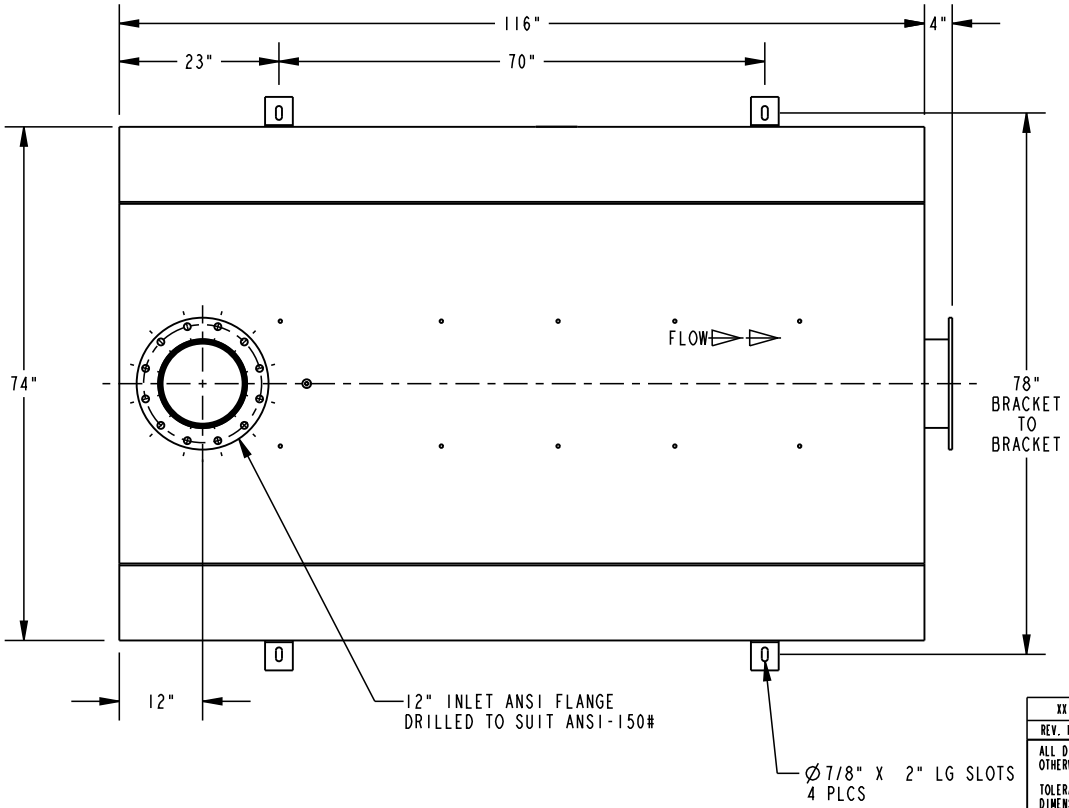

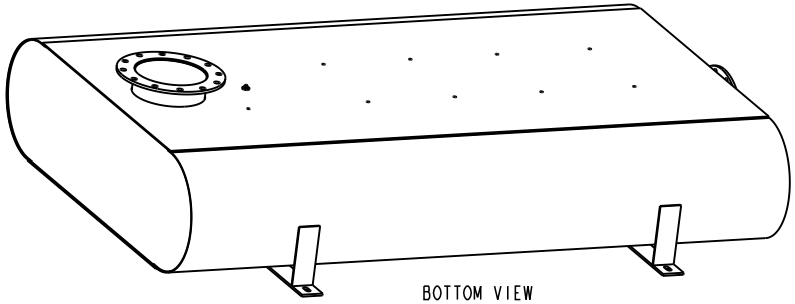

BOTTOM VIEW
SCALE 0.030

NOTES:

1. MATERIAL CARBON STEEL.
2. SILENCER IS DESIGNED TO SUPPORT OWN WEIGHT ONLY.
3. STANDARD MAXIM CONSTRUCTION TOLERANCE APPLY ±1/4".
4. ALL WELDED CONSTRUCTION.
5. DRAWING SUBJECT TO CHANGE WITHOUT NOTICE.

XX	XX	MM/DD/YY	XXXXXXXXXXXXXX
REV. NO.	REV. BY	DATE	DESCRIPTION

ALL DIMENSIONS IN INCHES UNLESS OTHERWISE SPECIFIED.

TOLERANCES APPLY ON CRITICAL DIMENSION(S) AS SHOWN BELOW:
±1/4" IMP FRAC; ±0.25 IMP DEC
±6.35 MM METRIC; ±2° ANGULAR

DIM HOLD - CRITICAL DIMENSION

THE INFORMATION HEREIN IS THE PROPERTY OF MAXIM SILENCERS. TRANSMITTAL TO OTHERS OR USE EXCEPT THAT FOR WHICH IT IS PROVIDED IS STRICTLY PROHIBITED. DO NOT SCALE DRAWING.

THIRD ANGLE PROJECTION

DRAWING TYPE: SALES			
DRAWN BY: CM	DATE: 4/13/18		
APPROVED BY:	DATE:	TITLE: SILENCER, ENCLOSURE, THIN LINE, EXTREME GRADE	
REF #: 03	EST. WEIGHT: 2598 LBS	MAXIM MODEL NO.: MR62-12C1-ST	DRAWING NO.: STANDARD / REV: 00
ORDER:	SHIP DATE:	PROJECT/SALES ORDER NO.	EXTERNAL FINISH: HT BLACK PAINT / SHEET: 1 OF 1

MAXIM SILENCERS
10635 Brighton Lane
Stafford, TX. 77477
PH (832) 554-0980
FX (832) 554-0990
www.maximsilencers.com