Silencing + Quality Steam Generation or Liquid Heating

APPLICATIONS:

- Hospitals
- Schools
- Office buildings
- Shopping centers
- Offshore platforms
- Oil & Gas production facilities
- Industrial plants
- Marine

CODE COMPLIANCE

All Maxim heat recovery equipment is designed and fabricated in compliance with Section VIII, Division I, ASME Code.

Size Range: Exhaust connections from 2" through 30" in diameter

Construction: The Maxim Finned Tube or MFT heat recovery silencers are basically water tube type. It is constructed to combine Maxim standards of silencing with a highly efficient heat exchanger design. This is possible through the use of extended surface tubes, which permit the design of a much more compact and light weight unit. The MFT has no moving parts and requires minimum routine maintenance. The unit must be installed vertically when used as a steam generator and may be installed vertically or horizontally when used as a liquid heater without affecting heat recovery or silencing characteristics. The heat recovery silencer shall provide sound attenuation equal to at least 28 dBA.

Extended Heating Surface: The finned tube design is a means of greatly increasing the surface in contact with the hot exhaust gases by attaching longitudinal fins directly to the water tubes. By doing this the tube's ability to transfer heat is increased by 700 to 800 percent. A further advantage is that at low exhaust flow conditions the efficiency of the fins increases tending to offset the reduced heat transfer rate to the tubes. This gives much higher recovery at part load operation than is possible with plain tube construction.

Expansion: The tube bundle of the MFT is fixed at one end and free to slide on the other, thus minimizing thermal stresses.

OPERATION

Flow Diagram

Exhaust gas enters the heat recovery silencer through connection (1), makes a reversal at the lower end of the unit and passes up over the finned tubes through which the heat is transferred to the water. The gas exits through the exhaust outlet connections (2).

The water enters through connection (3) and from there it enters the lower manifold and passes into the tubes. After absorbing the available heat the water (or steam and water mixture) exits through connection (4).

There are many available combinations of exhaust gas and water flow but the same basic relationship will hold for all.

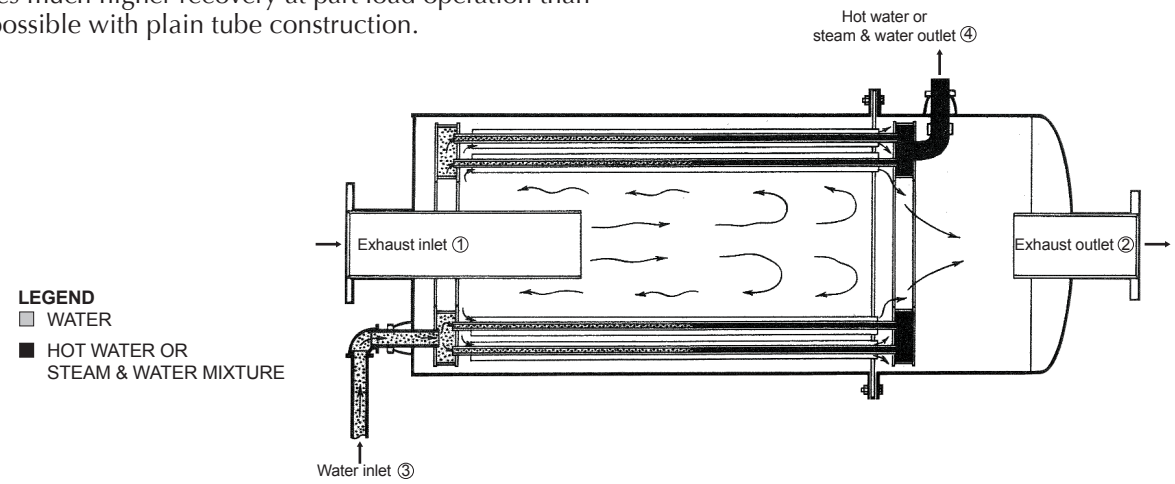

1	2	3	4	5	6
MFT	1010	14	3V	1P	165

1. Model designation
2. Nominal heating surface area (sq. ft.)
3. Nominal exhaust inlet/outlet diameter (in.)
4. Type and orientation of water and exhaust inlet/outlet
5. Number of passes
6. Design pressure 165 psi

EXAMPLE:

MFT-1010-14-3V-1P-165D*-SGS**

A unit for a nominal 1010 sq. ft. heating surface - 14" inlet and outlet exhaust connections - type 3 vertical orientation - one pass unit - 165 psig - with a diverter valve (internal or external) - for sewage gas service

*Add “D” if diverter valve is required
**Add SGS for sewage gas service

HORIZONTAL ARRANGEMENT DRAWING

MFT

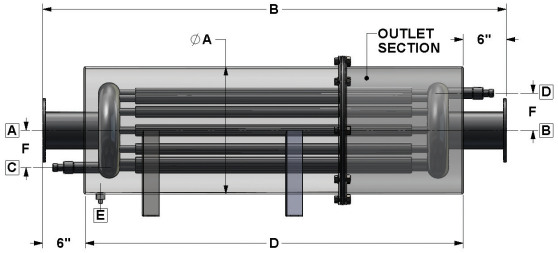

TYPE 1H

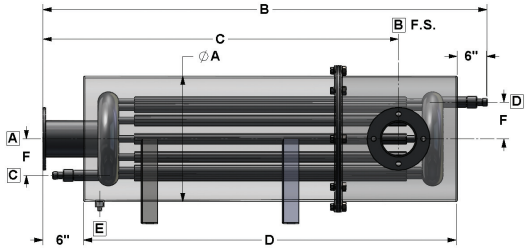

TYPE 2H

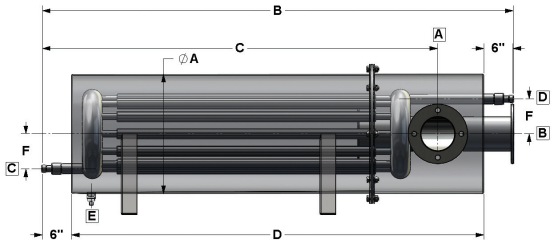

TYPE 3H

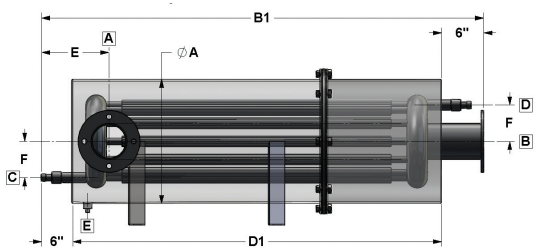

TYPE 4H

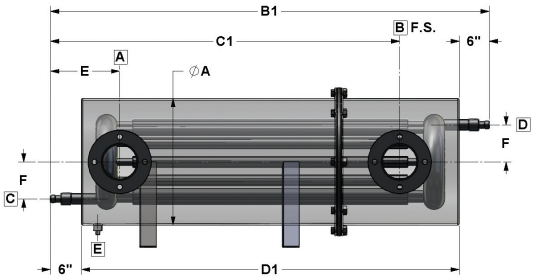

TYPE 5H

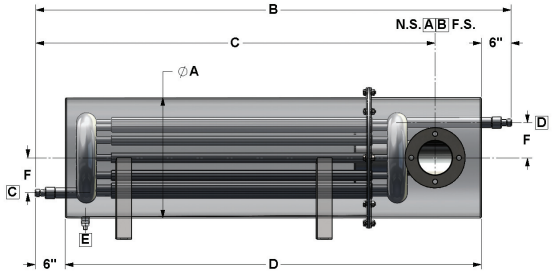

TYPE 6H

MFT MODEL-SIZE		DIMENSIONS IN INCHES									INTERFACE POINTS					* WEIGHTS IN POUNDS			
																DRY		WET	
STD PERF	HI PERF	A	B	B1	C	C1	D	D1	E	F	A	B	C	D	E	STD PERF	HI PERF	STD PERF	HI PERF
80-4	100-4	16 1/4	105	111	93	99	93	99	10	6 ⅜	4	4	1 ½	1 ½	1	631	644	646	659
135-5	165-5	18 1/4	107	114	94	101	95	102	10 ½	7 ¼	5	5	1 ½	1 ½	1	746	763	765	782
195-6	235-6	22 1/4	110	118	95	103	98	106	11	9	6	6	2	2	2	1009	1039	1042	1072
325-8	400-8	26 1/4	114	124	96	106	102	112	12	11 ⅛	8	8	2	2	2	1586	1637	1635	1686
495-10	600-10	30 3/8	121	133	104	112	109	121	13	11 ½	10	10	3	3	2	2876	2954	2993	3071
740-12	900-12	40 3/8	125	139	102	115	113	127	14	15 ½	12	12	3	3	2	4127	4242	4297	4412
1010-14	1235-14	50 3/8	129	145	103	118	117	133	15	20 ½	14	14	3	3	2	5805	5963	6115	6273

NOTES:

- Constructed and stamped for 165 psi liquid heating service
- Over pressure protection required (safety-relief valve provided by customer)
- Insulation is required to achieve rated performance
- Outlet section is removable for access to tube bundle

A Exhaust inlet – plate flange with 150 lbs ASME/ANSI drilling
B Exhaust outlet – plate plange with 150 lbs ASME/ANSI drilling
C Water inlet – MNPT
D Water outlet – MNPT
E Shell drain – MNPT

*Heaviest unit – type 5H

VERTICAL ARRANGEMENT DRAWING

MFT

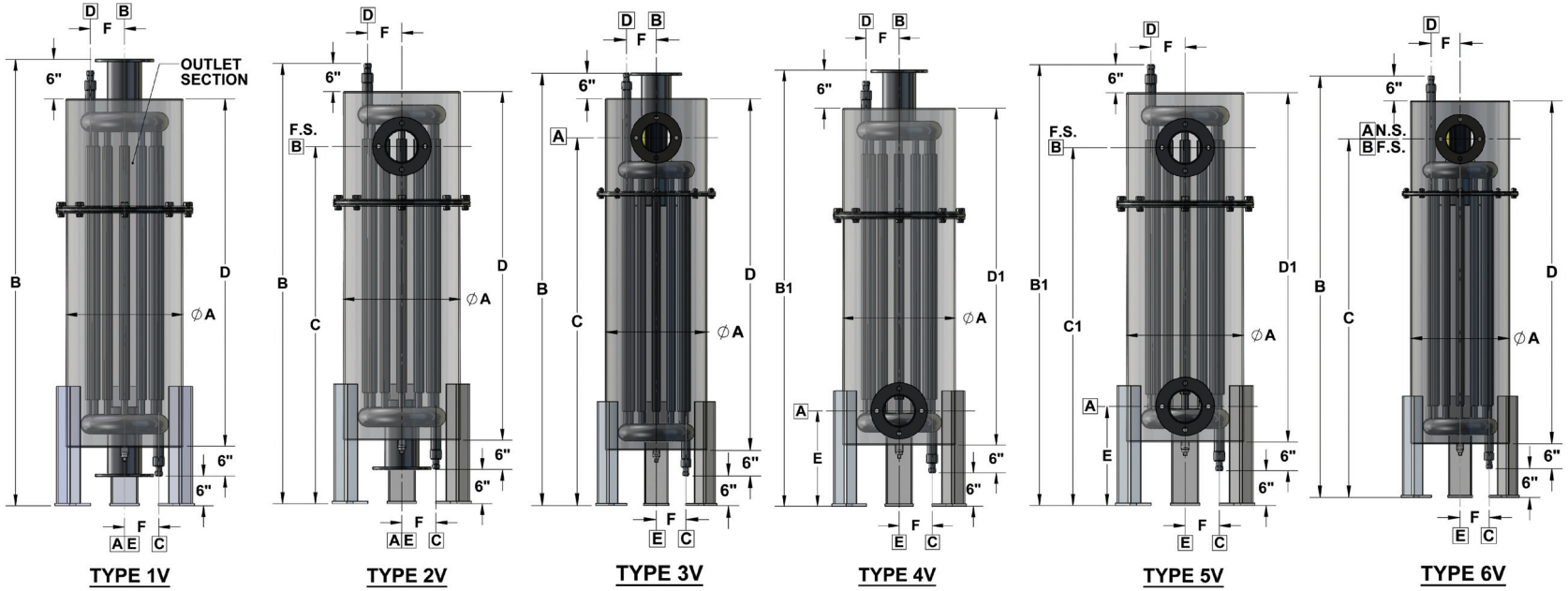

MFT MODEL-SIZE		DIMENSIONS IN INCHES									INTERFACE POINTS					* WEIGHTS IN POUNDS			
																DRY		WET	
STD PERF	HI PERF	A	B	B1	C	C1	D	D1	E	F	A	B	C	D	E	STD PERF	HI PERF	STD PERF	HI PERF
80-4	100-4	16 ¼	111	117	99	105	93	99	16	6 ⅜	4	4	1 ½	1 ½	1	684	697	699	712
135-5	165-5	18 ¼	113	120	100	107	95	102	16 ½	7 ¼	5	5	1 ½	1 ½	1	798	815	817	834
195-6	235-6	22 ¼	116	124	101	109	98	106	17	9	6	6	2	2	2	1058	1088	1091	1121
325-8	400-8	26 ¼	120	130	102	112	102	112	18	11 ⅛	8	8	2	2	2	1632	1683	1681	1732
495-10	600-10	30 ⅜	127	139	110	118	109	121	19	11 ½	10	10	3	3	2	2933	3011	3050	3128
740-12	900-12	40 ⅜	131	145	108	121	113	127	20	15 ½	12	12	3	3	2	4174	4289	4344	4459
1010-14	1235-14	50 ⅜	135	151	109	124	117	133	21	20 ½	14	14	3	3	2	5821	5979	6131	6289

NOTES:

- Constructed and stamped for 165 psi liquid heating or steam generating service
- Over pressure protection required (safety-relief valve provided by customer)
- Steam seperator is required for steam generating service (Maxim model HSS sized for MFT rated recovery)
- Insulation is required to achieve rated performance
- Outlet section is removable for access to tube bundle

A Exhaust inlet – plate flange with 150 lbs ASME/ANSI drilling
B Exhaust outlet – plate flange with 150 lbs ASME/ANSI drilling
C Water inlet – MNPT
D Water outlet – MNPT
E Shell drain – MNPT

*Heaviest unit – type 5V